HOW TO CALCULATE HOW MANY SECTIONS OF 8 FEET TO ORDER

Some products are only available in straight section of 8 feet (96 inches), namely the 3100, 8860, 8900 and the whole Gypsum Series. Here's an example on how to calculate how many sections to order:

Example

Walls Profiles

192 + 120 + 67 + 86 + 125 = **590 in**

590 ÷ 96 = **6.15**

6.15 rounded up = **7 sections total**

PROFILE	LENGTH
3100 QTY - Profile	Available in straight section of 8 feet (96 inches/2.4 m). *Cut on site
7 QUANTITY	x **96 INCHES** LENGTH

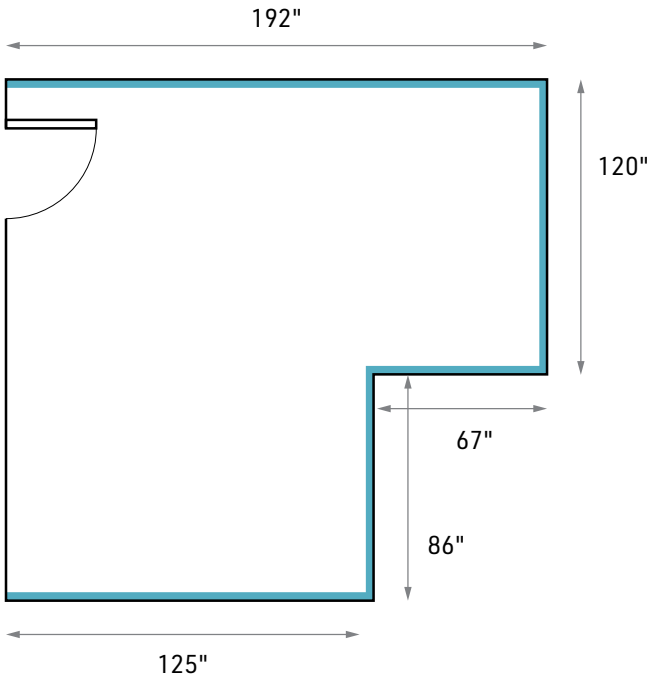

HOW TO CALCULATE TOTAL LED ENGINE ORDERING LENGTH

Those same products only available in straight section of 8 feet will not have the LED engine preinstalled. For these profiles where the LED engine will be assembled on site, you need to specify the length when ordering.

Order each length separately: 192 + 120 + 67 + 86 + 125

COLOR TEMPERATURE	LUMEN PACKAGE*	LEAD IN/OUT	USAGE	POWER SUPPLY/CONTROL	LENGTH
24 - 2400K	**LP0** - 128 LM / 1.5W FT / 90+CRI	**HW3** - Hardwire 3 FT	**I** - IP22 indoor dry location	**A** - Non-dimming	**Total lenght of LED engine in inches** - See Appendix 3 on how to calculate length.
27 - 2700K	**LP1** - 160 LM / 1.5W FT / 90+CRI	**HW6** - Hardwire 6 FT		**B** - ELV dimming 120V AC	
30 - 3000K	**LP2** - 255 LM / 3.0W FT / 90+CRI	**HW9** - Hardwire 9 FT		**C** - ELV dimming 120/277V AC	
35 - 3500K	**LP3** - 308 LM / 4.5W FT / 90+CRI	**HWX** - Hardwire custom FT		**D** - 0/10V dimming 120/277V AC	
42 - 4200K	**LHP** - 700 LM / 7.0W FT / 95+CRI	**DC3** - DC plug 3 FT		**E** - Non-dimming DC plug in	
53 - 5300K (LHP only)	**Note:** Not applicable for WarmDim & RGB color temperatures	**DC6** - DC plug 6 FT		**F** - DMX	
62 - 6200K (LP only)		**DC9** - DC plug 9 FT		**NO** - No driver	
RGB - RGB		**DCX** - DC plug custom FT			
RGBW - RGBW		**NO** - No lead			

COLOR TEMPERATURE CCT	–	LUMEN PACKAGE	–	LEAD IN	LEAD OUT	–	USAGE	–	POWER SUPPLY/CONTROL	–	LED ENGINE LENGTH
	–		–			–		–		–	**192"**

***NOTE:** The light output is provided in lumens per foot, for a CCT of 4200K and a clear lens. Please refer to the optics page for CCT and translucency conversion factors.

LumenTruss™. All rights reserved.